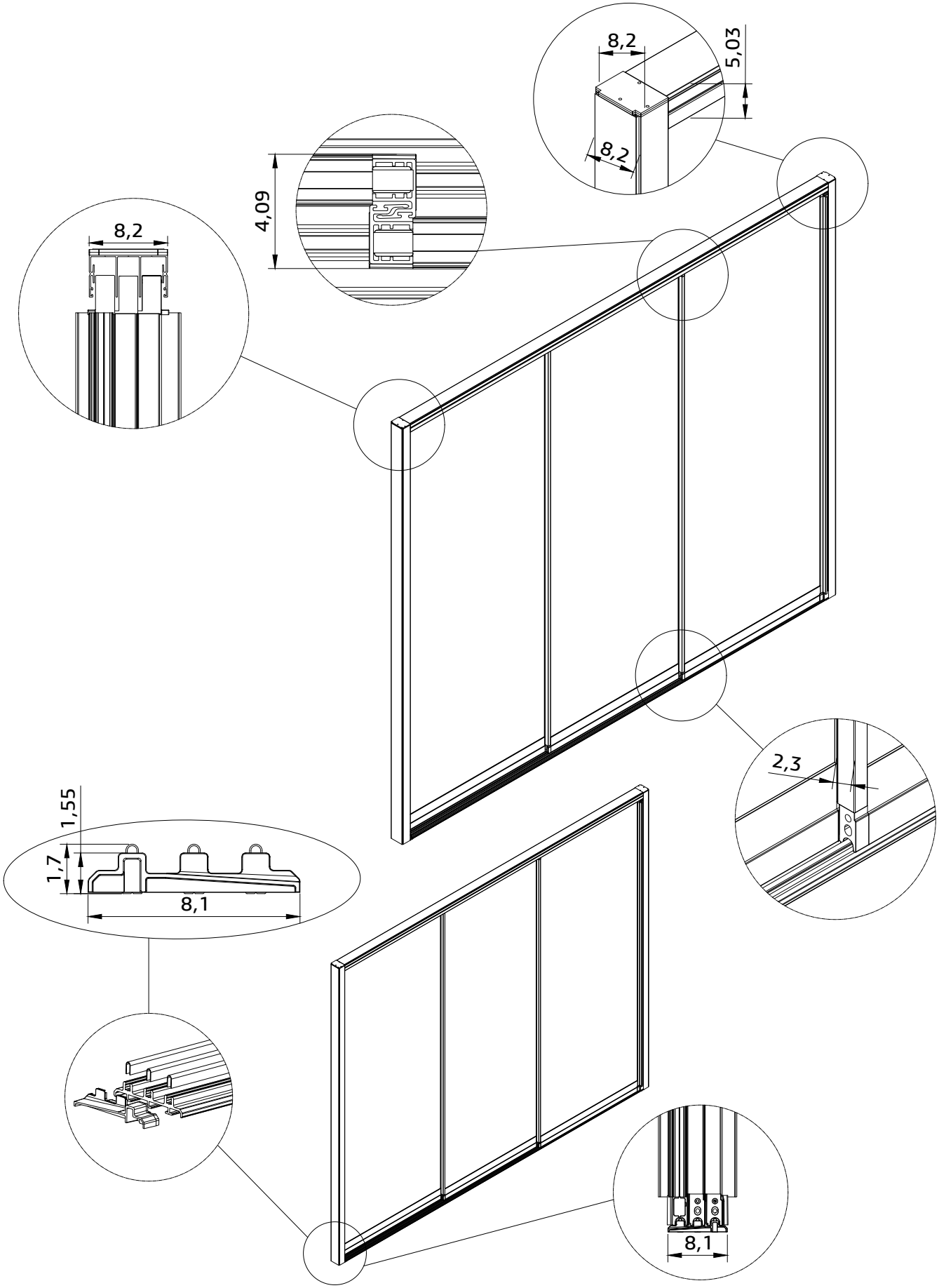
8,2
5,03
8,2
4,09
8,2
2,3
1,55
1,7
8,1
8,1

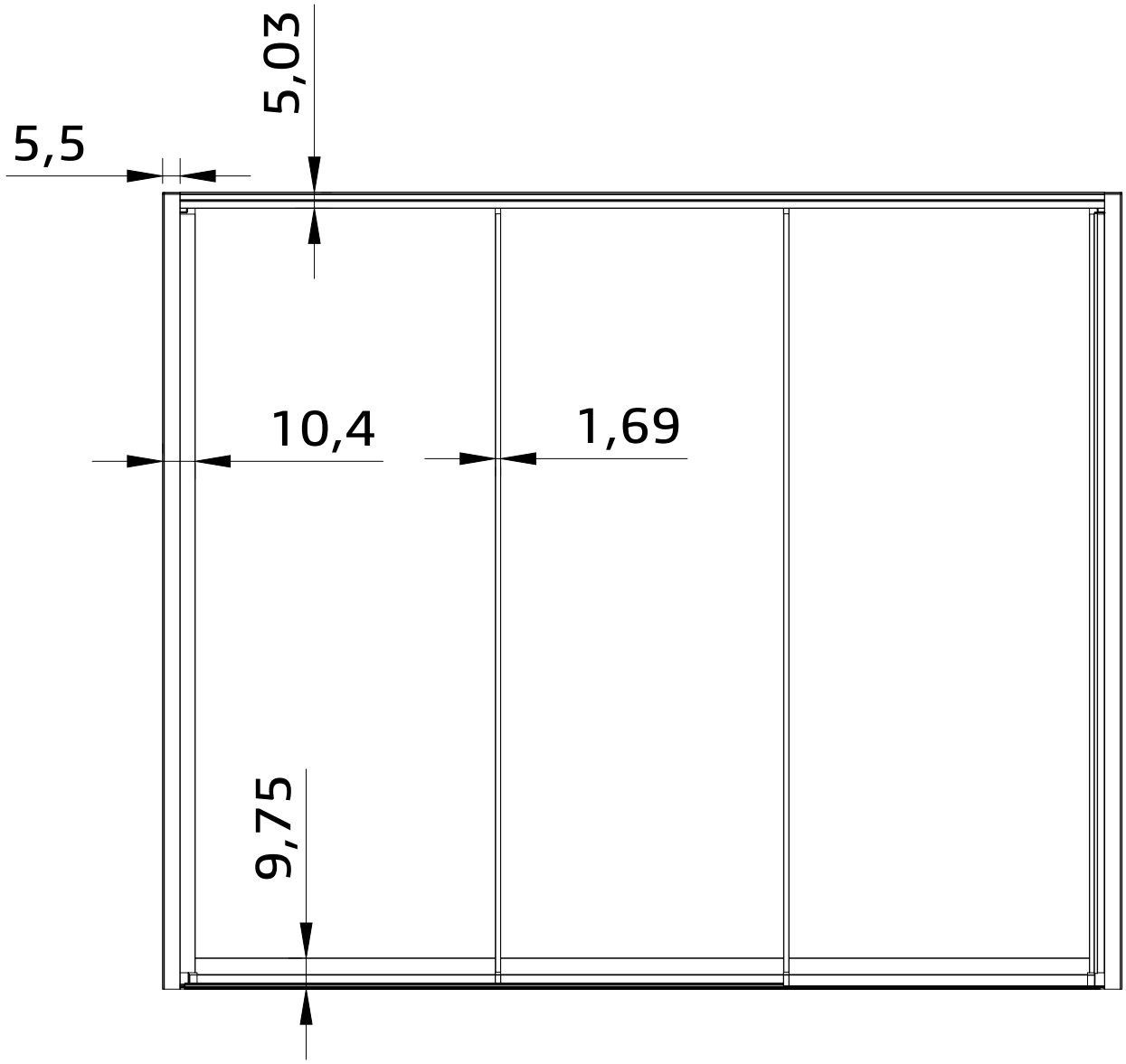
5,03
5,5
10,4
1,69
9,75

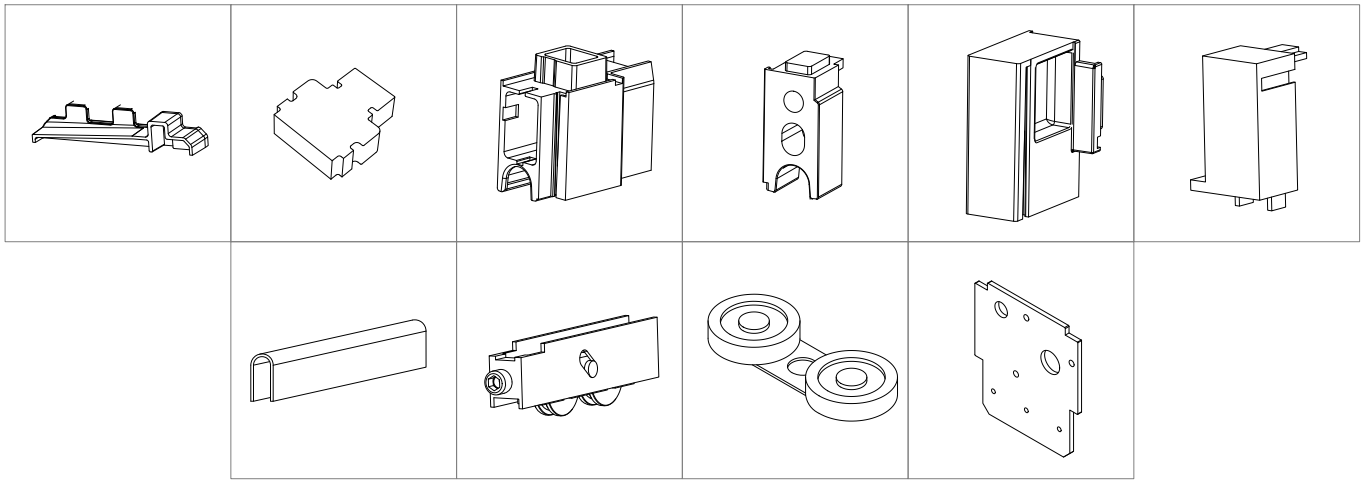

DOUBLE OPENING SLIDING SYSTEM

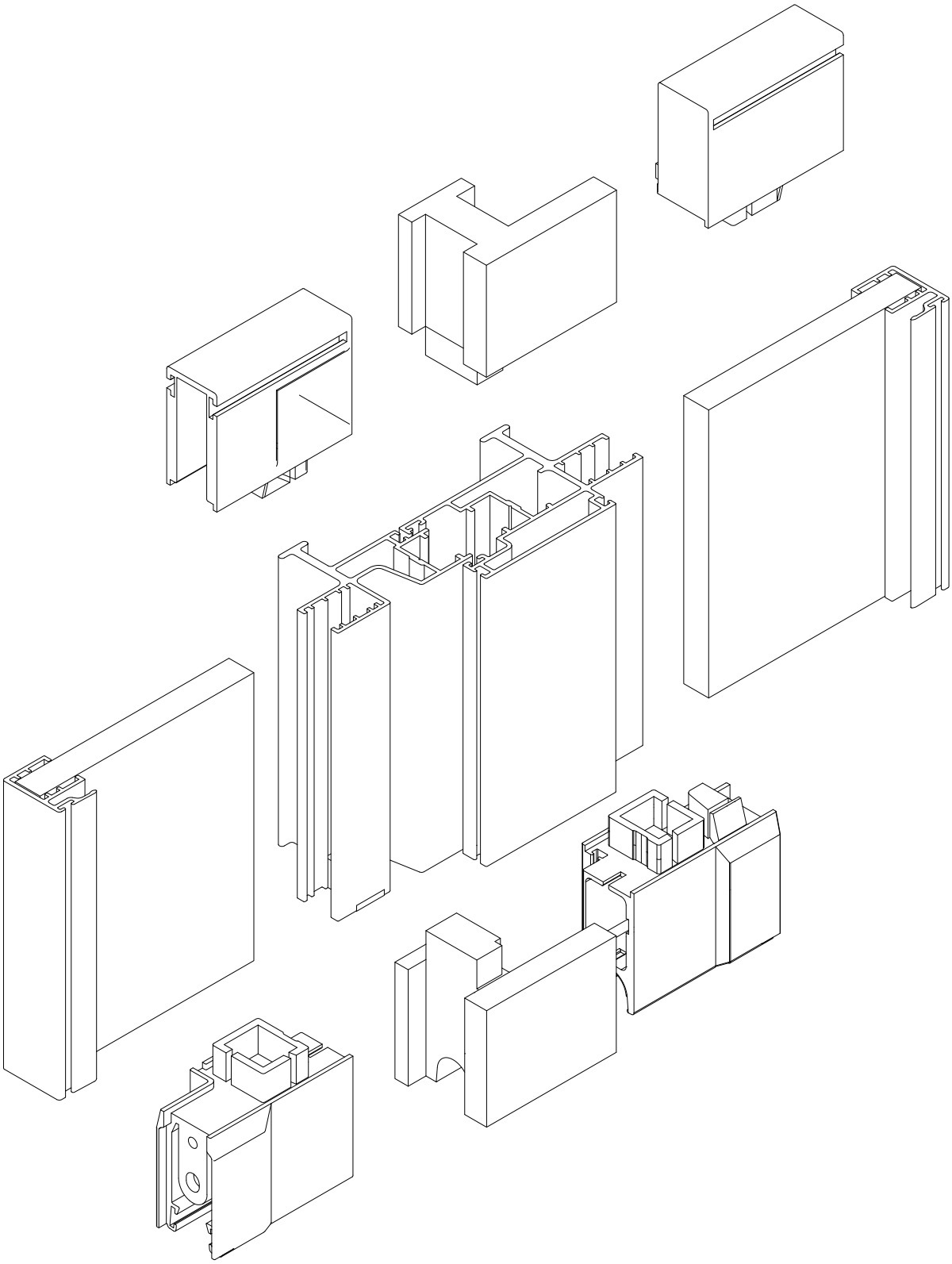

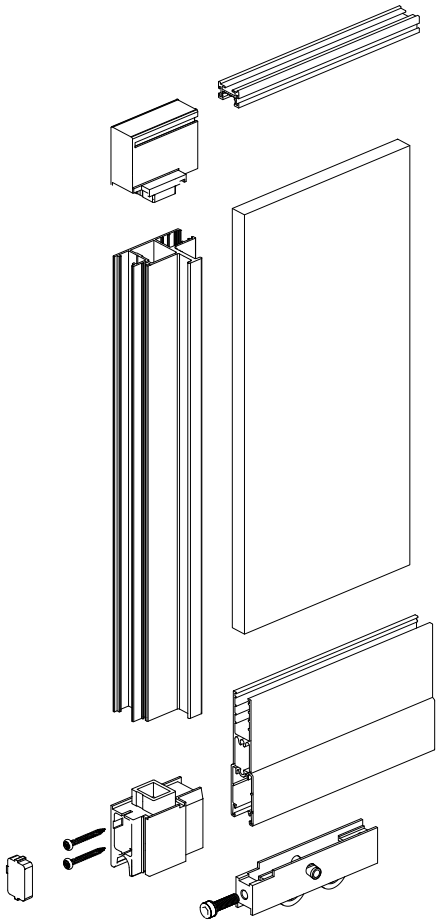

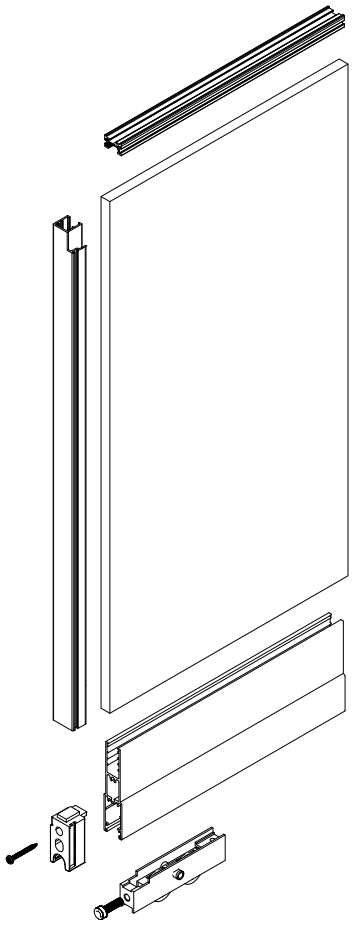

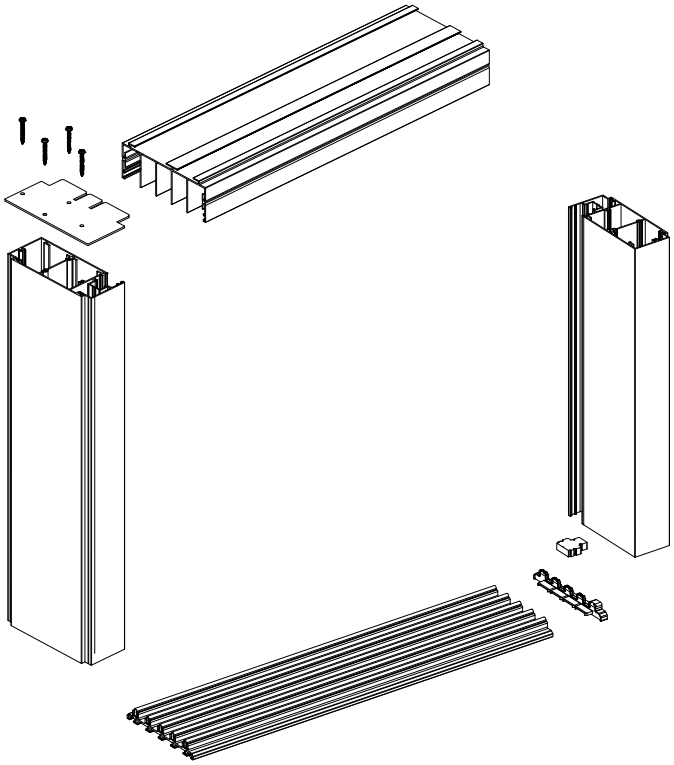

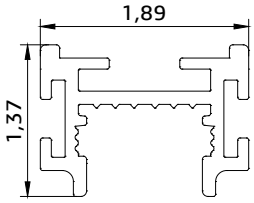

11574	WEIGHT (gr/m)	214,9	
MATERIAL	AA. 6063	SURFACE DATA	PRES
CATALOG NO 17011980		EMRE ALM. SLIDING SINGLE	

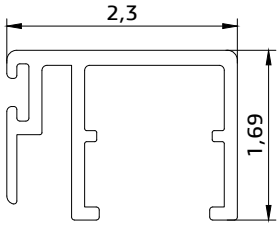

11573	WEIGHT (gr/m)	276,6	
MATERIAL	AA. 6063	SURFACE DATA	PRES
CATALOG NO 17011979		EMRE ALM. SLIDING SINGLE	

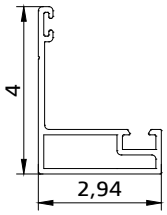

12039	WEIGHT (gr/m)	430,3	
MATERIAL	AA. 6063	SURFACE DATA	PRES
CATALOG NO 17072193		EMRE ALM. SLIDING SINGLE	

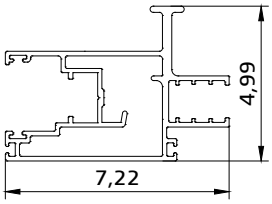

M6313	WEIGHT (gr/m)	1403,3	
MATERIAL	AA. 6063	SURFACE DATA	PRES
CATALOG NO 18092655		EMRE ALM. SLIDING SINGLE	

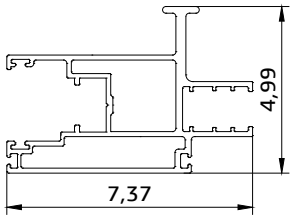

M6292	WEIGHT (gr/m)	1435,9	
MATERIAL	AA. 6063	SURFACE DATA	PRES
CATALOG NO 18052462		EMRE ALM. SLIDING SINGLE	

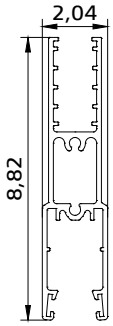

11579	WEIGHT (gr/m)	1055,4	
MATERIAL	AA. 6063	SURFACE DATA	PRES
CATALOG NO 17011977		EMRE ALM. SLIDING SINGLE	

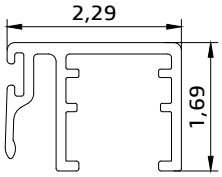

11646	WEIGHT (gr/m)	291,3	
MATERIAL	AA. 6063	SURFACE DATA	PRES
CATALOG NO 17011979		EMRE ALM. SLIDING SINGLE	

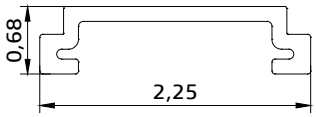

12061	WEIGHT (gr/m)	174,6	
MATERIAL	AA. 6063	SURFACE DATA	PRES
CATALOG NO 17052171		EMRE ALM. SLIDING SINGLE	

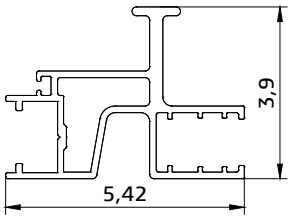

M6305	WEIGHT (gr/m)	928,9
MATERIAL AA. 6063	SURFACE DATA	PRES
CATALOG NO 18082521	EMRE ALM. SLIDING SINGLE	

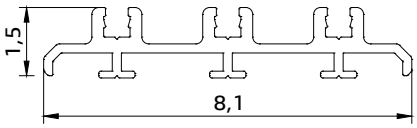

M6333	WEIGHT (gr/m)	1063,5
MATERIAL AA. 6063	SURFACE DATA	PRES
CATALOG NO 19012763	EMRE ALM. 3 PANEL SLIDING SINGLE ALM. PROFİLİ	

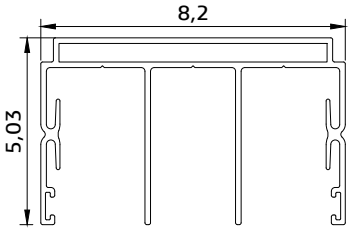

M6332	WEIGHT (gr/m)	1552,3
MATERIAL AA. 6063	SURFACE DATA	PRES
CATALOG NO 19012762	EMRE ALM. 3 PANEL SLIDING SINGLE ALM. PROFİLİ	

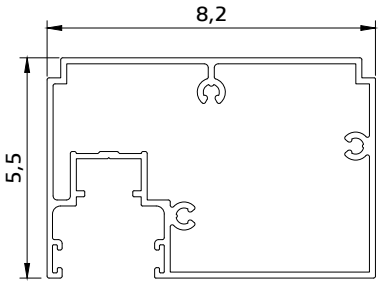

M6334	WEIGHT (gr/m)	1529,8
MATERIAL AA. 6063	SURFACE DATA	PRES
CATALOG NO 19012764	EMRE ALM. 3 PANEL SLIDING SINGLE ALM. PROFİLİ	